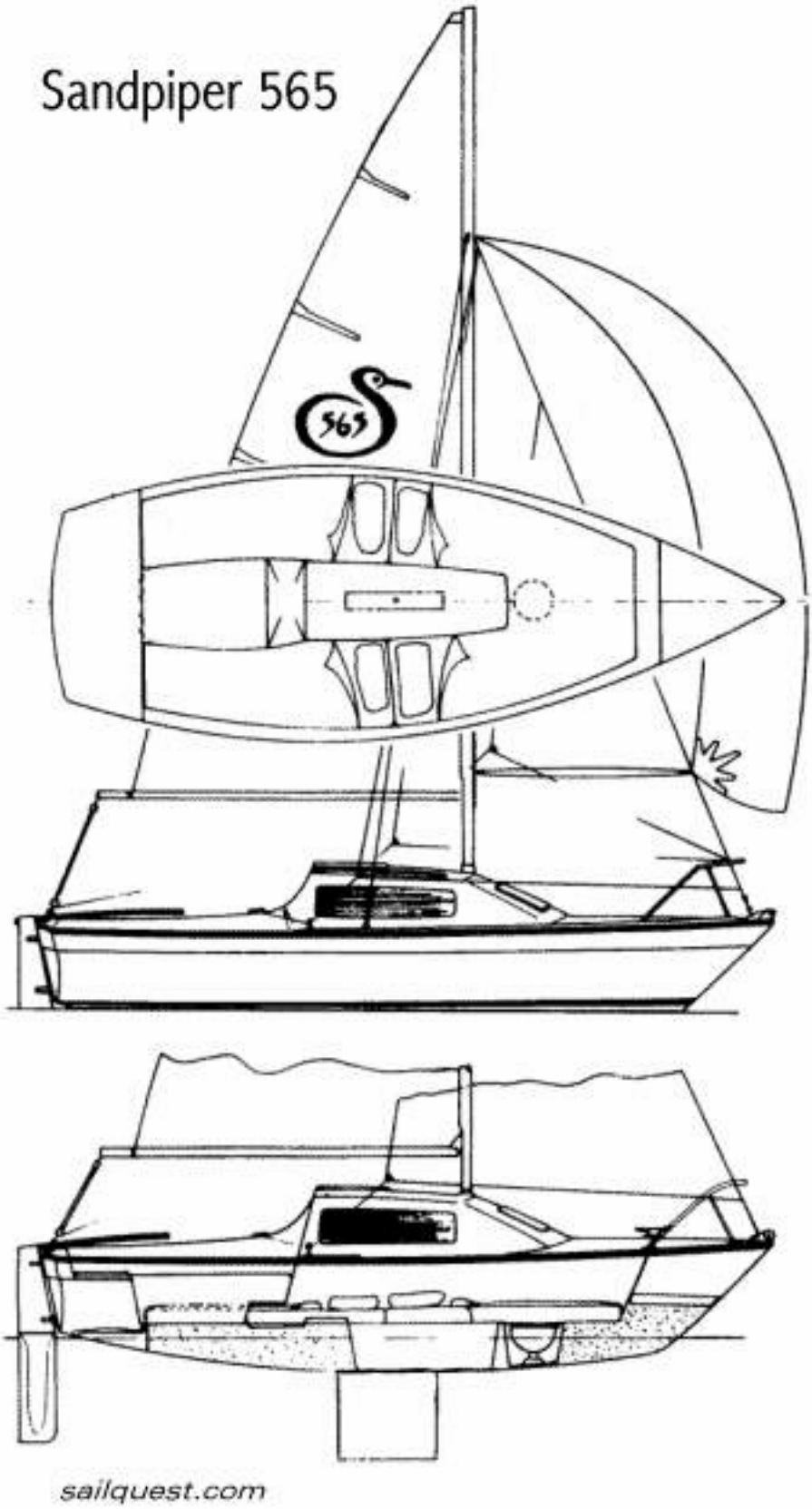

GRYC Sandpiper 565
Rigging instructions and general information

THE SANDPIPER 565

(Rigging Instructions from the Original owners manual - circa 1973)

The SANDPIPER 565 sailing sloop was first manufactured in 1972 by Messrs. Sandpiper Marine Ltd. of Southampton, England, and was built under licence by C&L Boatworks located in Fort Erie, Ontario

This seaworthy and stable yacht has many desirable features, and with its' retractable keel is so adaptable for trailering, launching and beaching that its owners can enjoy sailing in many different waters.

Outstanding amongst its characteristics is the carefully designed and extremely dry cockpit with its high coaming for comfortable daysailing, with non-skid surfaces and extra large space for the helmsman and crewmembers.

It can sleep two extra people under the optional cockpit canopy, and the large transom locker allows stowage of an outboard motor and fuel tank, as well as other items. The retractable outboard motor bracket is standard equipment and facilitates storage when sailing.

All moulding is hand lay-up, with built-in buoyancy provided for additional safety. The side decks are wide enough to walk on with ease, and there are handrails on the cabin roof for added convenience in rough weather conditions.

There is easy access to the cabin through the large sliding main hatch, and the cabin is light and airy with two large hatches and two plexiglass ports. Four large berths with deep, soft cushions allow for comfortable sleeping, and ample main storage is provided below the berths, with the handy port and starboard cave lockers so great for odds and ends. A convenient locker for storing the keel winch handle is also provided. There is excellent sitting headroom, and an optional drop-leaf table fits neatly onto the keel housing.

All deck fittings are of the finest non-corrosive quality, including stemhead, roller, mooring cleat and fairleads. The anchor and chain locker is self-draining and the forward hatch is well positioned for access to the foredeck and ventilation. The bow pulpit is an attractive option, and a good safety feature especially when mooring, docking, setting spinnaker, dropping foresails or anchoring.

The SANDPIPER 565 secures neatly on a trailer for mobility and can be trailed with ease. Launching and recovery is simple, allowing access to inland and coastal waters. The keel is recessed within the hull for trailing and storage. All these features make the SANDPIPER 565 the ideal yacht for family cruising a sit has full accommodations for four persons. For Class or Handicap racing, the addition of a spinnaker improves the performance and makes it exciting and fun to race.

Please refer to fig. 1 for Illustrated Layout of component parts.
Note: Item numbers noted are not used in subsequent detail layouts.

Illustrated layout of component parts

Figure 1

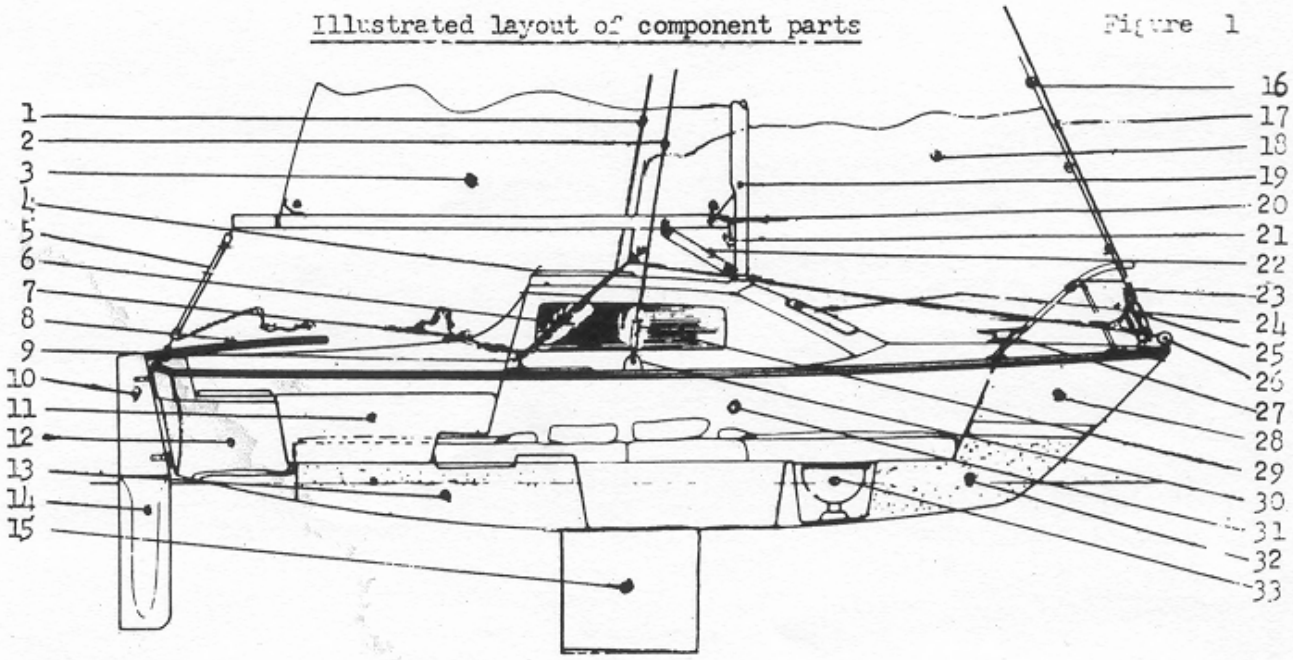

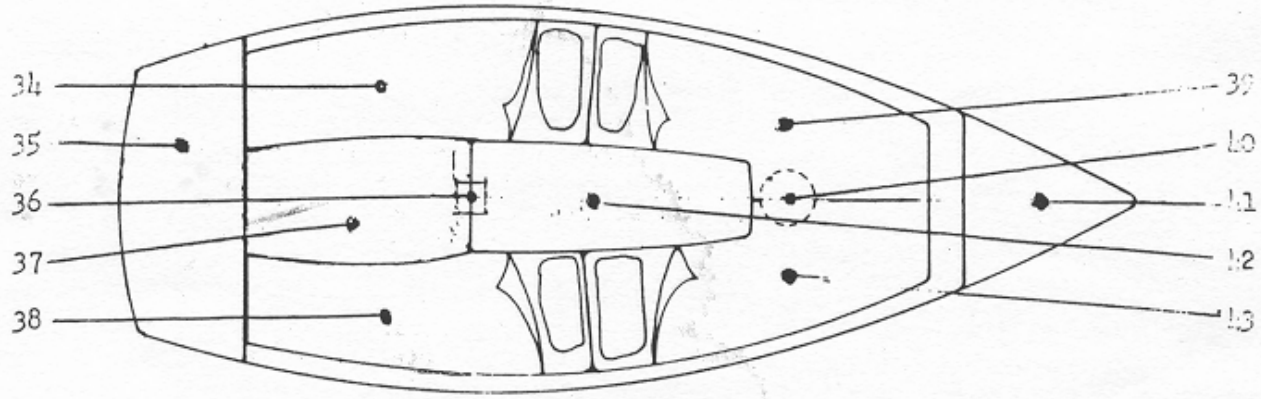

Item numbers and description of parts

1 Port shroud
2 Starboard shroud
3 Mainsail
4 Sliding hatch cover
5 Mainsheet
6 Jibsheet
7 Jib sheet jamb cleat
8 Tiller
9 Jib sheet slider block
10 Rudder Head
11 Cockpit self-bailing
12 Stowage area
13 Buoyancy compartment
14 Rudder blade
15 Retractable keel
16 Jib piston hank
17 Forestay
18 Jib
19 Mast
20 Boom
21 Gooseneck
22 Boom vang
23 Pulpit rail
24 Forward hatch
25 Forestay turnbuckle
26 Bow plate
27 Bow cleat
28 Anchor & chain locker
29 Shroud turnbuckle
30 Chainplate eye
31 Cabin area
32 Buoyancy compartment
33 Chemical toilet
34 Port quarter berth
35 Rear deck
36 Cockpit/cabin steps
37 Cockpit floor
38 Starboard quarter berth
39 Port forward berth
40 Toilet location
41 Foredeck
42 Main cabin floor
43 Starboard forward berth
44 Mast step

GENERAL RIGGING INSTRUCTIONS FOR SANDPIPER 565

Introductory Comments:

In order that these instructions may be comprehensible to comparative newcomers to sailing, they are written in elementary terms and an attempt is made to explain the meaning of nautical words when they occur. Most experienced sailors have their own ideas on how to rig their boat, but these instructions are intended to provide a basis from which the new owner of a SANDPIPER 565 can begin.

1. Mast and Fittings

(a) Standing Rigging

The mast when "stepped", i.e. erected, is supported by three wire stays collectively called the standing rigging. All three have an eye at their uppermost end, and adjusters, called turnbuckles, at their lower end.

The two stays of equal length are called the shrouds and must be attached at their upper ends to tangs located on each side of the mast about 3/4 height from the mast foot. Two swinging type spreaders (metal tubes) must be attached to the mast side brackets located about centre of mast by means of large split pins provided. A shroud wire is then fitted into the slot on the outboard end of each spreader and secured with a split pin. The turnbuckles of the shrouds must be attached to the two steel shroud eyes, which protrude through the side deck near centre of cabin windows. The third longer stay is called the forestay, and must be attached at its upper end to the tang at the front of the mast located 3/4 height from mast foot.

The turnbuckle of the forestay must be attached to the first hole in the bow deck fitting, located at the extreme bow of the boat using attached shackle, see figure 3,

Attachment of the standing rigging is effected by headed clevis pins which are themselves secure" by split pins. The mast has a slotted hole at the centre of its butt end, or heel, and when it is being stepped, the slotted end is dropped over the stainless steel bolt located in the centre of the mast step channel on the cabin foredeck.

(b) Rigging the Mast: see figures 2 and 3

Lay Mast g on trestles or on the ground with the sail groove facing downwards Reeve (i.e. pass) the unspliced end of the main halyard A4 from back face of mast head sheave A3 and forward over the two sheaves (i.e.-: - pulleys), run down mast until the length is evened up and secure the other end with a "0" shackle A2 to mast cleat A14.

Reeve the unspliced end of jib halyard A15 from front side of pulley block A1B run down mast until the length is evened up and secure the other end with a "D"-shackle to mast cleat.

Attach spreader tubes AB one each side to mast attachment brackets A16 with large split pins.

Shroud wires A7 are both the same lengths. Attach eye end A6 to mast tang A19 on each side Of mast at 3/4 height from mast heel using headed clevis pins and split pins. Insert shrouds A7 into slot in outboard end of spreader tubes AB and secure with split pins. -Set spreaders at right angle to mast and with downward tension on shroud wires tape together tightly. Attach turnbuckle A1O right hand threaded fork end to lower end of shroud eye end A6 with clevis Pin and split pin.

Forestay wire A9 attach eye end A6 to houndband AS using clevis pin and split pin. Attach turnbuckle AID right hand threadedfork end to lower end of forestay eye end with clevis pin and split in. Reeve the unspliced end of topping lift A17 from aft side of "D" shackle then forward and down mast until ends are evened up and secure other end with a "D" shackle to mast cleat.

(c) Stepping the Mast:

Make sure that the boat is securely set, to avoid mishaps. Lay mast complete with rigging on the boat with the mast foot (heel) into the mast step A20 (mast slot down) on to the step pin bolt. Un-thread shroud and forestay turnbuckles and re-thread barrels onto fork ends until approximately 3/S" has entered the barrel at both ends. Less than 3/B" is unsafe. Connect the shroud fork end to eye chainplate A24 using clevis pin and split pin.

NOTE: TIE THE SHROUD TURNBUCKLES UPRIGHT TO THE HANDRAILS ON THE

CABIN ROOF TO AVOID BENDING THEM WHEN RAISING THE MAST.

Raise the mast against the mast step pin from the cockpit and push upwards by walking forward to the cabin keel case until the mast is in a vertical position. A second person is required and can assist by pulling on the forestay to help raise the mast, then 'to connect the fork end of the forestay turnbuckle to the front hole in the bow plate A24 using clevis pin and split pin, while the first person keeps the mast upright.

(d) Following is the identification of items referred to in (b) and (c) above. See also figures 2 and 3,

Al Mast
A2 "D" shackle/or captive shackle
A3 Mast Head Sheaves
A4 Main Halyard
AS Houndband
A6 Shroud and Forestay eye ends
A7 Shrouds - port & starboard
AB Spreader Tube
A9 Forestay
AIO Turnbuckles - shroud & forestay
All Heel slot
A12 Boom vang attachment plate
A13 Topping Lift Cleat
A14 Jib and Main Halyard Cleat
AIS Jib Halyard
A16 Bracket for Spreader Tube
A17 Halyard Topping Lift
A1S Jib Halyard Pulley
A19 Shroud Tang
A2D Mast step
A21 Shroud chain eye
A22 Rear Locker Cover
A23 Bow Fairlead (or chock)
A24 Bow Plate
A2S Anchor Locker Cover
A26 Mainsheet Traveller Track

cont'd

1. (d)

Figure 2

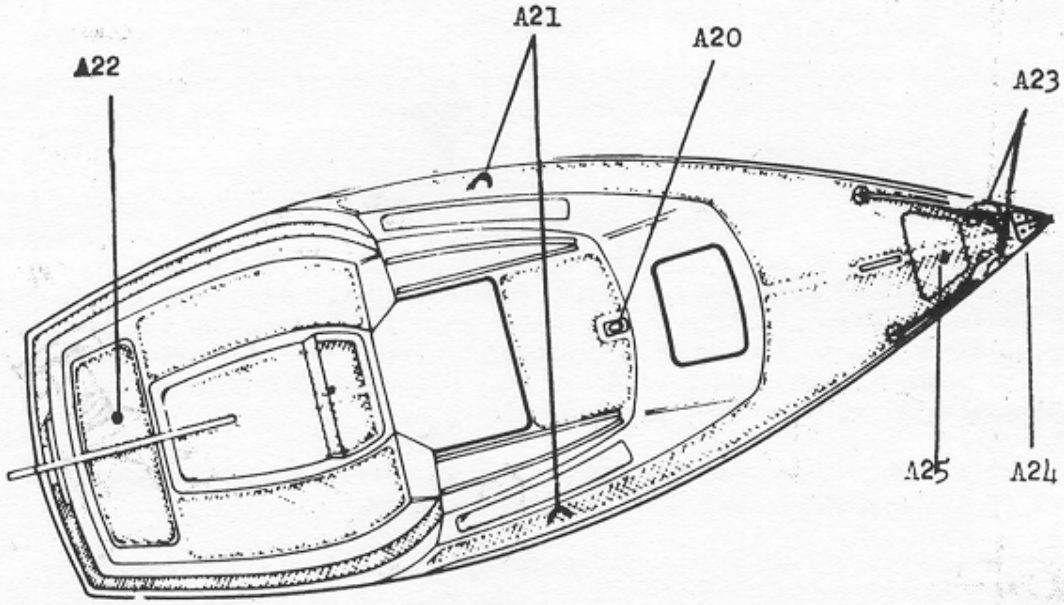

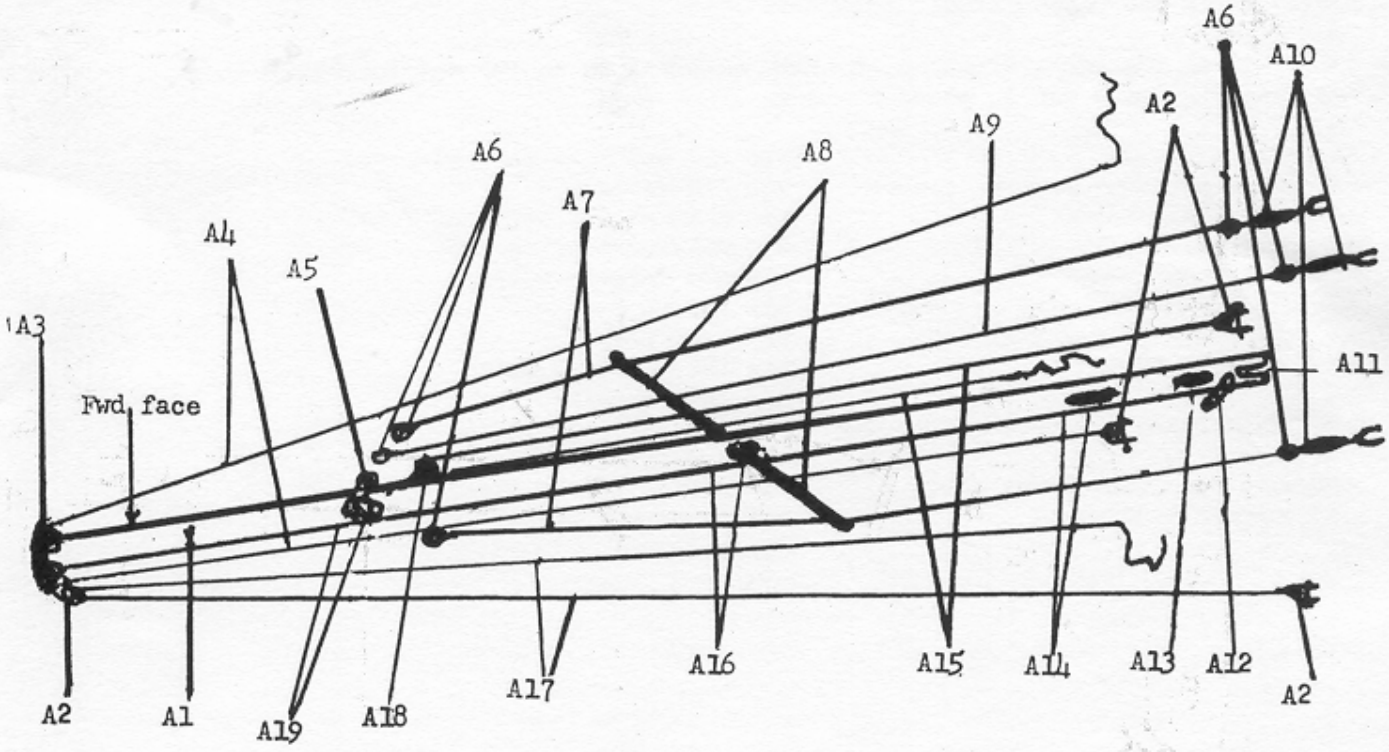

Figure 3

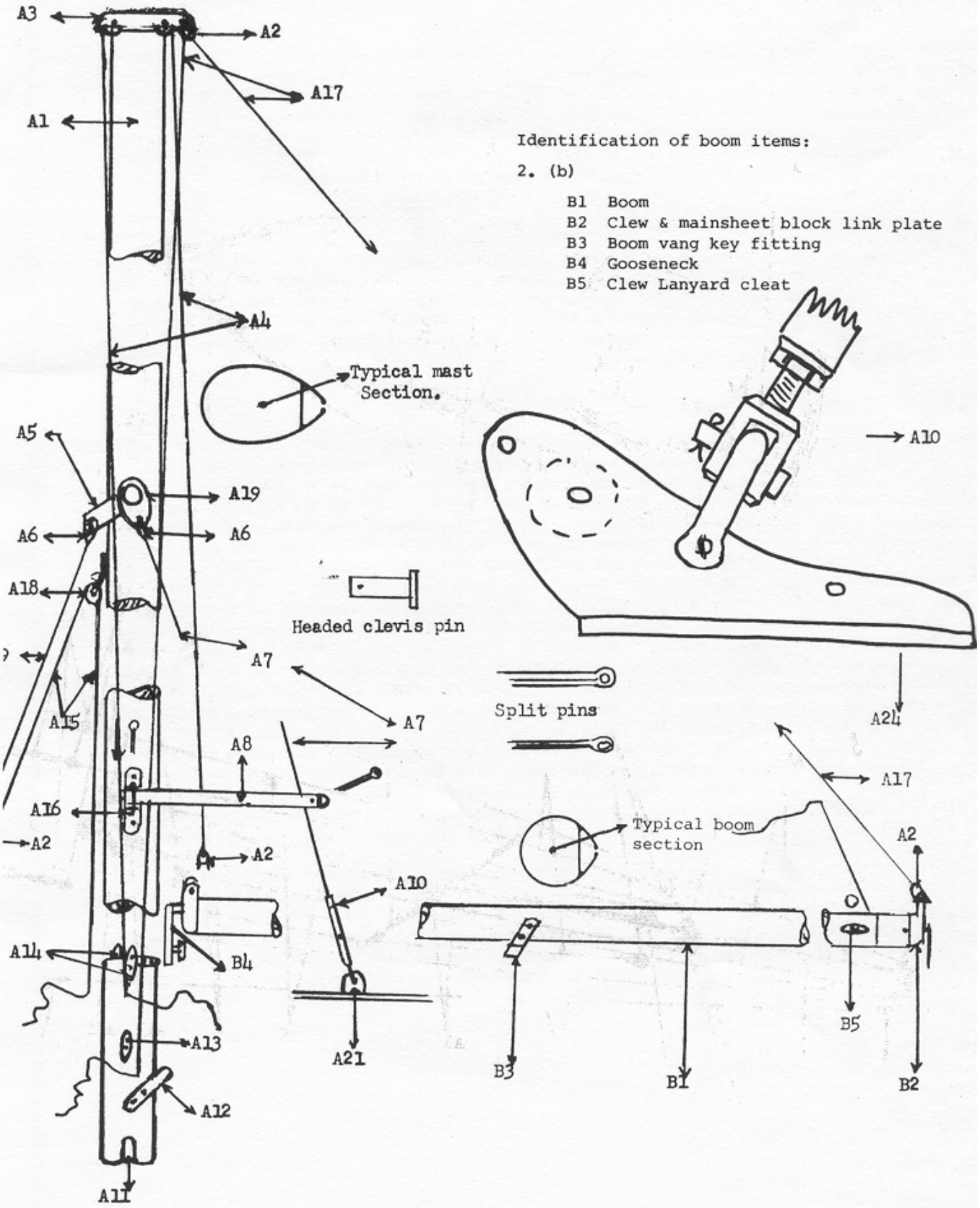

Identification of boom items:

2. (b)

B1 Boom
B2 Clew & mainsheet block link plate
B3 Boom vang key fitting
B4 Gooseneck
B5 Clew Lanyard cleat

2. Running Rigging and the Boom

(a) Running Rigging:

The running rigging comprises the halyards, which hoist the sails, and the sheets, which control their position when sailing. There are two halyards. One, which runs up the front face of the mast and down the back face, is the Main Halyard and consists of a wire with a braided rope tail, and is used to hoist the mainsail. The other halyard consists of a braided rope which runs outside of the mast through a swivel pulley located below the forestay wire mast tang. This the Jib Halyard and hoists the Foresail, or Jib.

For Sheets, see section 5,

(b) The Boom:

The boom is the spar, which is attached to the mast and to the foot of the mainsail. It has a groove in it, similar to the groove in the mast. At one end of the groove there is a large split pin in a transverse hole, and at the same end there is a sliding strap type swivel gooseneck which is inserted in the special wide groove in the mast. The boom and gooseneck slide is pushed down into the normal mast groove, below the sail entry groove.

3. Adjustment of Standing Rigging: see figure 4,

This should be done with the boat on an even keel and in a correct attitude fore and aft. Leveling the boat on a trailer is not too practical and it is recommended that adjustments be carried out when the boat is in calm water. A weight should be attached to the main halyard A4 and used as a plumb line and sighted along the groove of the mast. Adjust the shroud turnbuckles, which were previously equalized when stepping the mast, until the mast is upright when viewed from the stern or when the halyard is hanging down and in line with the centre of the mast groove. The rake (the amount the mast leans forward or aft) can then be adjusted. The mast should first be raked vertical, (straight up and down) by adjusting the turnbuckles on the forestay and the two shrouds, which had previously been adjusted for side angle. Tighten or loosen shroud turnbuckles evenly, the same number of t~J1S, and adjust the forestay the same way until the main halyard plumb line is parallel distance from back face of mast. The exact amount of tension on the standing rigging is a matter of experience and personal preference. Increase the tension until the slack is reasonably tight - but not as tight as a drum. Finally, and VERY IMPORTANT, see that the turnbuckle lock nuts are securely tightened and that the turnbuckle fork ends have at 3/8" remaining in each end of the barrel to avoid rigging damage in severe conditions. To prevent damage to clothing and sails it is good practice to wrap adhesive tape around turnbuckles and pins.

Further adjustment of the standing rigging is usually necessary after sailing in variable wind conditions. If heavy weather helm is noticeable in medium airs, then the mast rake must be moved forward. If a lea helm persists and the boat will not point well to weather then the mast rake must be increased aft. Adjustments to correct the problem should be made in stages. Reducing sail area in extremely strong winds will minimize weather helm.

Figure 4

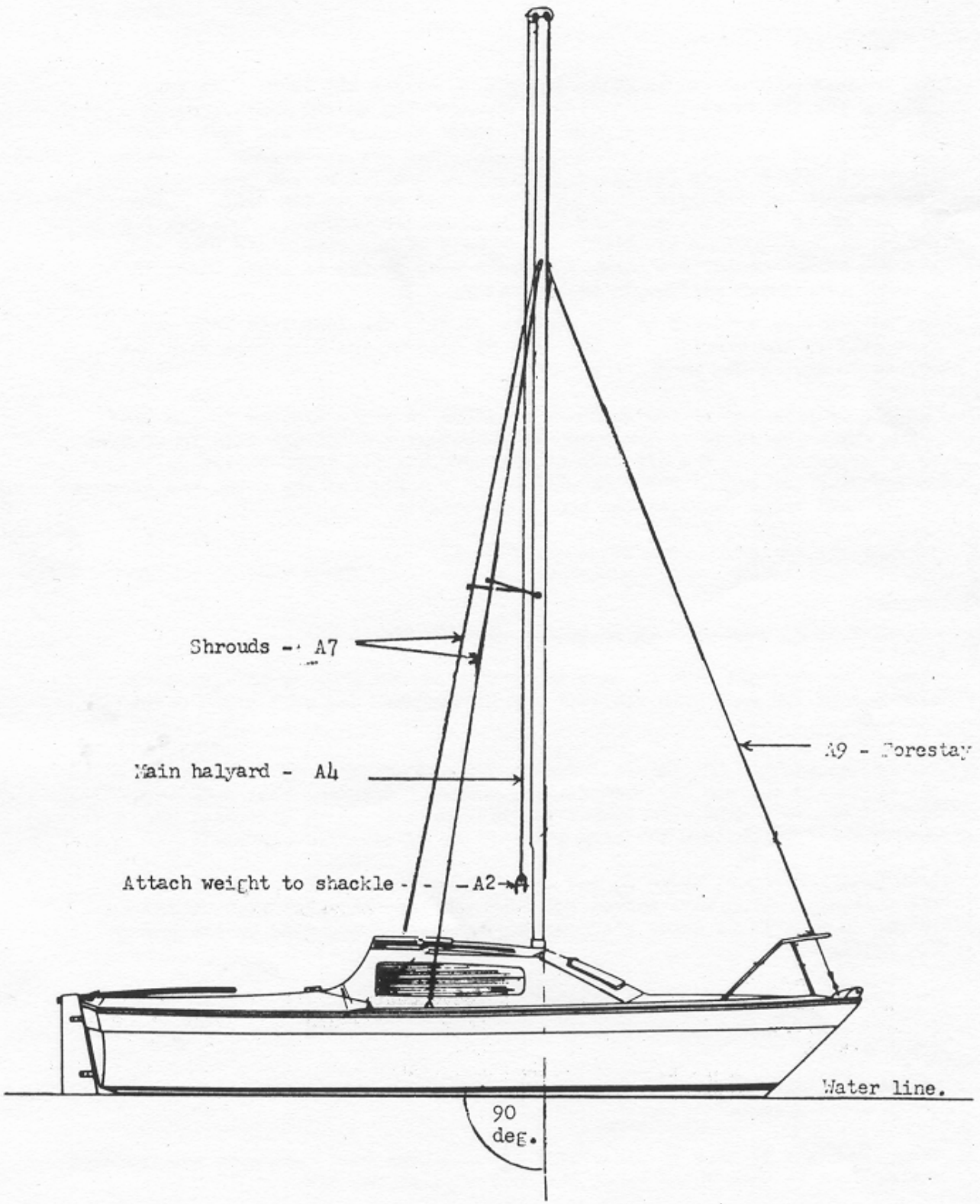

4. The Sails

(a) Nomenclature:

The forward edge of the mainsail and jib is called the LUFF. In the case of the jib there is an internal wire running up the luff, whereas the mainsail has a rope edge (the luff rope) attached to the luff. The lower edge of the sail is called the FOOT, and the other edge the LEECH. There are four pockets extending into the mainsail from its leech and four battens are provided to stiffen the after edge of the sail. The corners of the sail are provided with eyes called CRINGLES. The top corner of each sail is its HEAD; the forward bottom corner its TACK and the aft bottom corner its CLEW. At the head of the mainsail there is a small triangular stiffener, or headboard.

The mainsail is attached to the mast by sliding the luff rope into the mast groove. and similarly to the boom by sliding the foot rope into the groove on top of the boom.

The jib is attached to the forestay by clips or hanks secured to its luff wire, which can slide up and down the forestay, and the jib tack is secured by a "D" shackle to the aft hole of the bowplate. The topping lift is attached to the end of the boom with a "D" shackle and the other end cleated at the mast after leveling the boom horizontally.

Bending the Sails: see figure 5,

(b) Mainsail:

Insert boom (gooseneck) on to the mast (refer to 2b)

Thread the mainsail foot Cl into the groove of the boom by inserting the clew end of the foot into the tack end of the boom and pull along until fully drawn.

Secure the tack of the mainsail (lower forward cringle) C2 by inserting the split pin through the boom fitting and sail cringe, then pull the foot of the sail taut, and secure the clew cringle C3 by attaching the cord outhaul C4 through the boom end fitting B2 and-cleat securely.

Insert sail battens, three C5 and one C6 into the pockets on the leech of the mainsail. You will notice that the entrance slot for each batten is offset so that the end of Ithe batten- above the position ultimately occupies it.

Connect the headboard of the mainsail C4 to the end of the main halyard A4.

(c) Jibsail

Attach the tack cringle E2 of the jib to the rear hole in the bowplate A24 using a "D" shackle.

Snap jib hanks E3 onto forestay wire A9, and take care that none are fastened upside down as that would twist the luff wire of the jib.

Attach the shackle of the jib halyard A15 to the head cringle E4 of the jib.

Figure 5

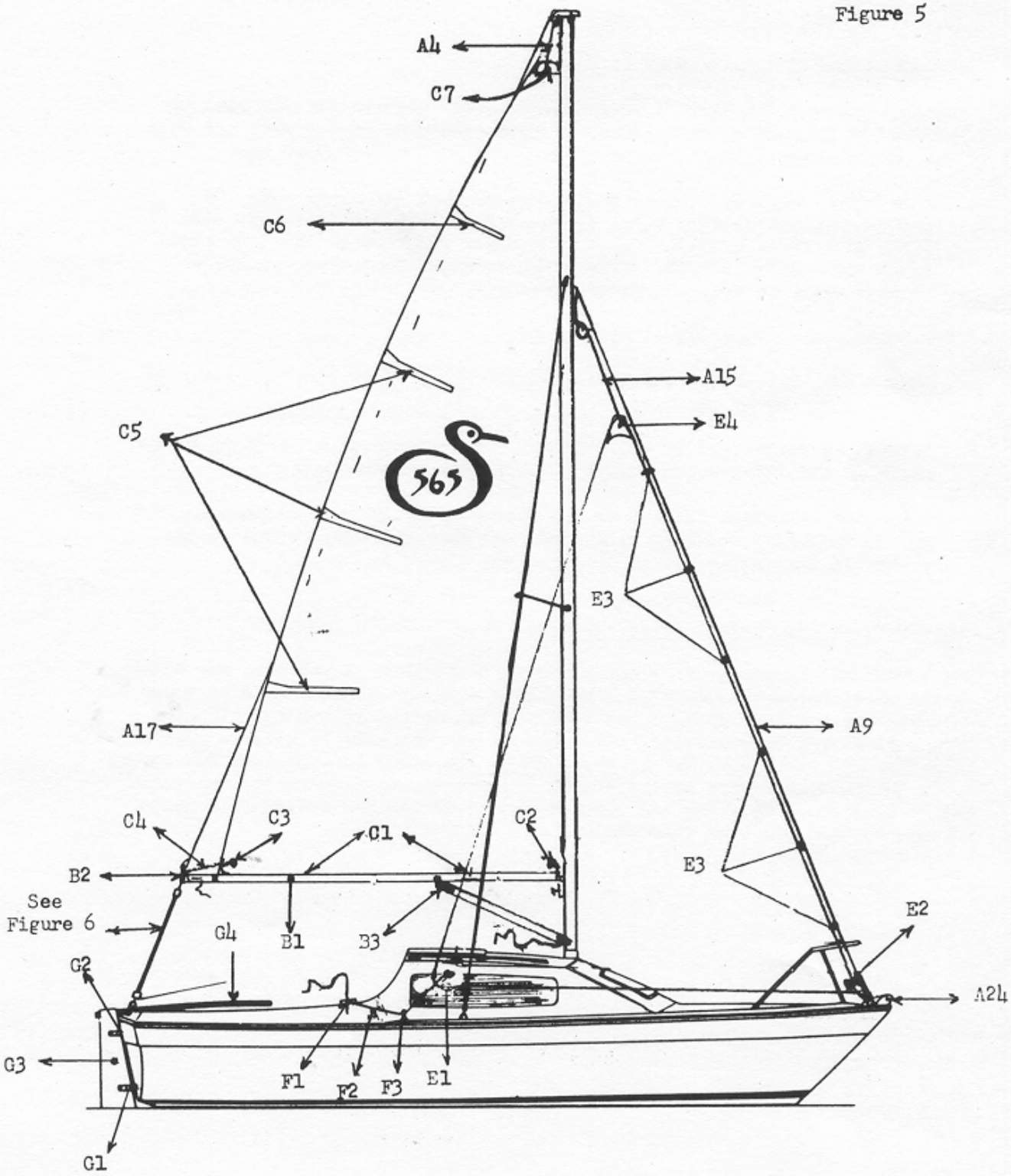

5. Jibsheet and Mainsheet arrangements

(a) Jibsheets: see figure 5,

Reeve jibsheet F2 (3/8" x 40ft. Dacron line) through the jib clew E1 until it is even on both sides. Knot each side of the clew eye with a single overhand knot.

Pass lines one each side of front face of mast and reeve each end through the jib sliding block F3 located on port and starboard side decks near cabin window. Pass-each sheet end through the jamb cleat combination block eye Fl. Tie a figure eight knot close to the end of each sheet to stop it escaping the eye.

(b) Mainsheet: see figure 6,

Attach the swivel of the single sheave block D1 to the link plate B2 at the clew end of the boom.

Attach the swivel end of the 2-sheave sister jamb cleat block D3 to the slide on the mainsheet track A26 with a "D" shackle.

Reeve the mainsheet (3/8" x 45 ft. dacron line) D2 by attaching one end to top sheave of block D3 with a bowline knot and then threading the other end through the back sheaves, per figure 6.

6. Transom Track arrangement (sheet-horse): see figure 6

The travel of the mainsheet track slide is controlled manually by two stops on the sheet-horse (track) A26. For light airs the stops should be moved up tight against each side of the slide in the centre of the track. In medium airs, set approximately 6" each side of the slide to allow a total travel of 12" for the slide. This can be increased if necessary for strong winds to the full extent of the track. For competitive racing the slide may be controlled by lines and jamb cleats to facilitate adjustments while sailing in variable wind conditions.

Hoisting the sails

(a) Always try to have the boat head to wind before hoisting the sails. The jib sail should always be hoisted first and hauling on the jib halyard until the sail is fully raised. The aim is make the luff of the jib as taut as possible. Failure to do this will inevitably be detrimental to sailing performance. It helps to have someone pull on the forestay when taking up the final tension before cleating the jib halyard. Some owners use a jib tensioner that is attached to the mast track.

To hoist the mainsail the head of the luff rope should be introduced to the throat at the lower end of the luff rope groove on the mast. Loosen off the locking screw of the gooseneck slide and then hoist the sail fully up and cleat the main halyard securely. Pull down on the boom and the gooseneck until the luff of the sail is taut. Then tighten the thumbscrew on the gooseneck to lock it in the slide on the mast. Tautness of luff depends on wind conditions, therefore you should not try to force the boom down to exactly the same position on each occasion. In light winds the luff can be left slacker, and pulled taut in heavier winds. Adjust the boom topping lift loosely for light airs so that the leech of the mainsail remains taut. Tighten for heavy airs to

open leech. If the sail has a very full luff, then a cunningham line should be used to tighten the excess luff to flatten the sail for heavy airs.

(b) Boom tackle: see figure 6

To control the extent to which the boom can lift when sailing. a tackle known as a kicking strap, or boom vang, is provided. In its simplest form it comprises a short wire strop attached to the mast bracket at one end and the other end of a vee jamb block with a "D" shackle and clevis pin. Another block with a special keyhole lug is snapped into the fitting underneath the boom. A lanyard is reeved through the two blocks to provide a multi purpose tackle so that by pulling on the end of the lanyard considerable tension can be applied, to suit various wind conditions, i.e. the more wind the tighter the kicking strap should be. The lanyard is locked in the block with the vee groove.

Reefing the mainsail see figure 7

If the wind is too strong to permit use of the full mainsail, this can be reefed by rolling it around the boom. To do this the sail should be hoisted, then the boom should be withdrawn aft until it disengages from the squared end of the pin.

This can be carried out by pulling from the clew end of the boom while the main halyard is eased off, and rotating the boom manually until the sail is reduced by the required amount. The boom should be snapped back onto the squared end pin to prevent it rotating under the pull of the reefed sail, and the main halyard secured.

Rolling the sail around the boom covers up the kicking strap fitting on the underneath of the boom. A roller reefing strap must, therefore, be used. This is a triangular piece of canvas with a nylon ring in one corner, and which is rolled up in the sail in the area of the boom fitting. Lay the short side along the boom, with the vertical edge forward and the ring at the bottom. One complete revolution inside the sail will provide sufficient friction to keep the strap in place. Connect the kicking strap block to the nylon ring with a shackle, after removing the key lug.

An alternative method is a clew ring rigged with a wire to the aft end of the boom, or a special reefing kicking strop device. Jiffy, or slab reefing is an efficient and easy to operate method.

Figure 6

Standard mainsheet and kicking strop arrangements.

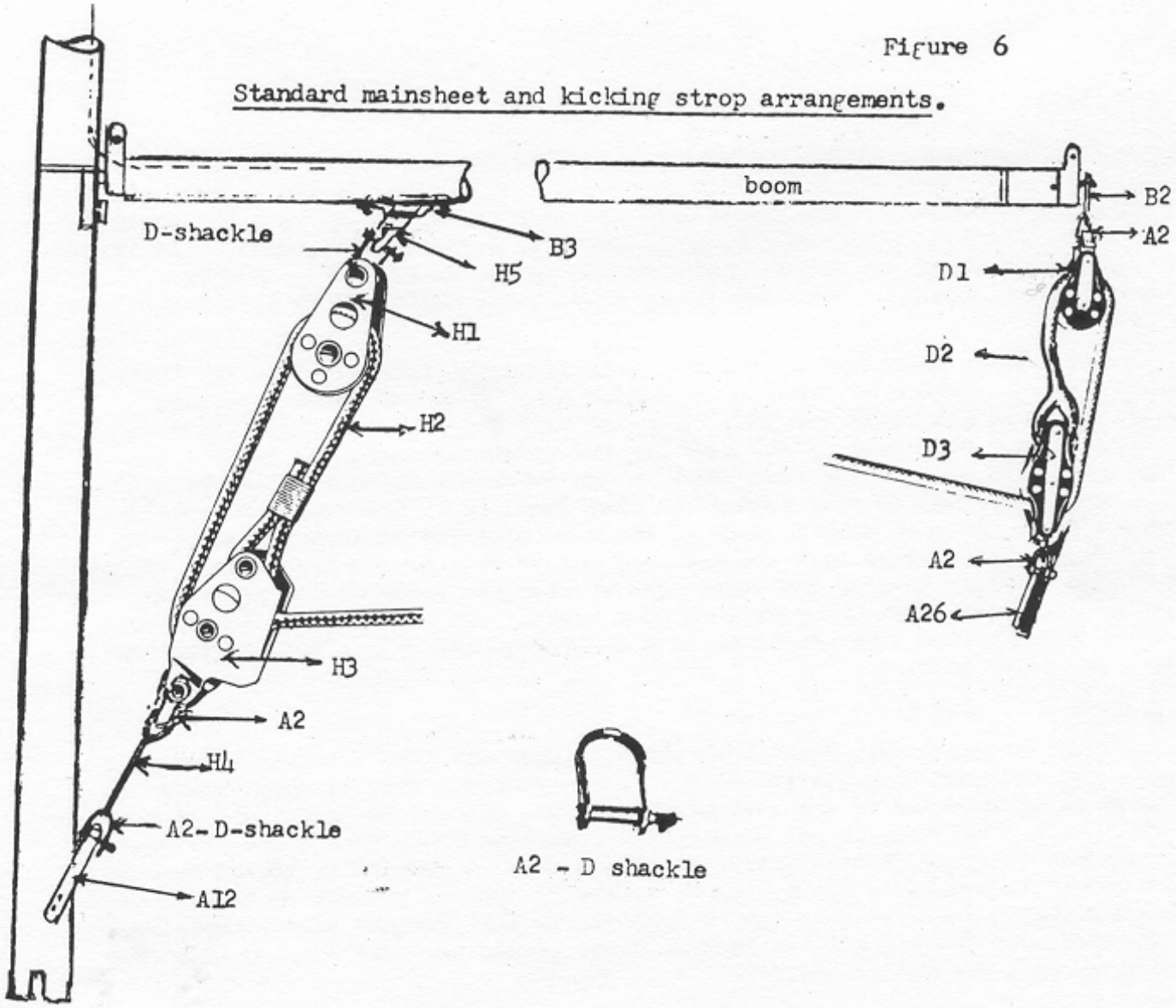

Item numbers and Description

Boom vang assembly

H1 Single becket block
H2 ¼"lanyard Dacron line
H3 Vee jamb block
H4 Wire strop
H5 Kicking strap key

Mainsheet assembly

D1 Becket
D2 3/8" Dacron line (mainsheet)
D3 Sister block and jamb cleat

8. Getting Afloat

Having learned how to bend (rig) and hoist the sails by practicing ashore several times, the boat should be launched with the sails lowered. The boat should be secured to a dock or mooring.

IT IS MOST IMPORTANT TO WATCH FOR LOW OVERHEAD HYDRO WIRES when stepping the mast prior to launching and again when lowering the mast after winching on a trailer, especially at an unfamiliar site.

(a) Retractable Keel arrangement: see figure 7,

The operation of the keel, which is raised and lowered manually, must be checked before preparation for sailing. Move the boat into minimum depth of 3 ft. of water and lower the keel fully down using the hand crank supplied.

Approximately 95/96 turns anti-clockwise are required to fully lower the keel.

9. Rudder arrangement: see figure 8

The rudder blade attached to the head pivots and should NOT be lowered down fully until the boat is in water deep enough to clear the bottom of the blade. To install, hang the rudder assembly § over the transom fittings G1 and G2, gudgeon and pintle, as shown in figure 5.

Insert the tiller, G4 into the hood at the top of the rudder head and secure it with the retaining pin provided. To lower the rudder blade to its operating position pull the shockcord attached to the lanyard forward, and hook eye end of shockcord to underside hook on tiller. Make sure that rudder blade is fully down tightly. Re-adjust lanyard to shockcord if more tension is required.

10. Final preparation

Check that the mainsheet is not twisted and that it has been reeved through the sister block jamb cleat in the correct direction, otherwise it will lock incorrectly. Hoist sails and make sure the jibsheets are positioned correctly and the ends knotted.

Decide which tack is best to sail out on and lower the keel a little if in shallow waters, leave the rudder blade up if necessary. Once in deep water lower the keel and the rudder blade fully.

Note: as an alternative, motor out to deep water, then lower the keel and rudder blade, head into the wind and hoist the sails and tension the boom vang.

Figure 8

G3 - Rudder Assembly Details

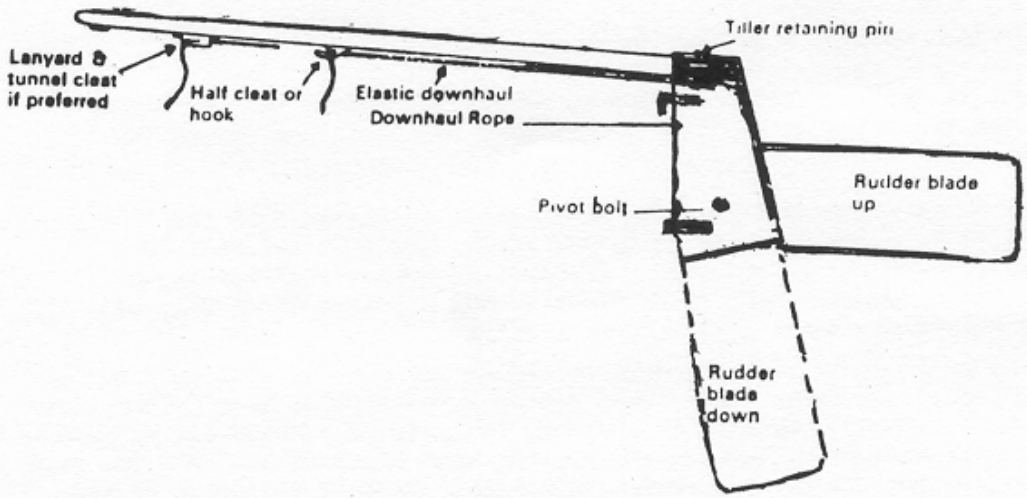

J1 - Retractable keel assembly details

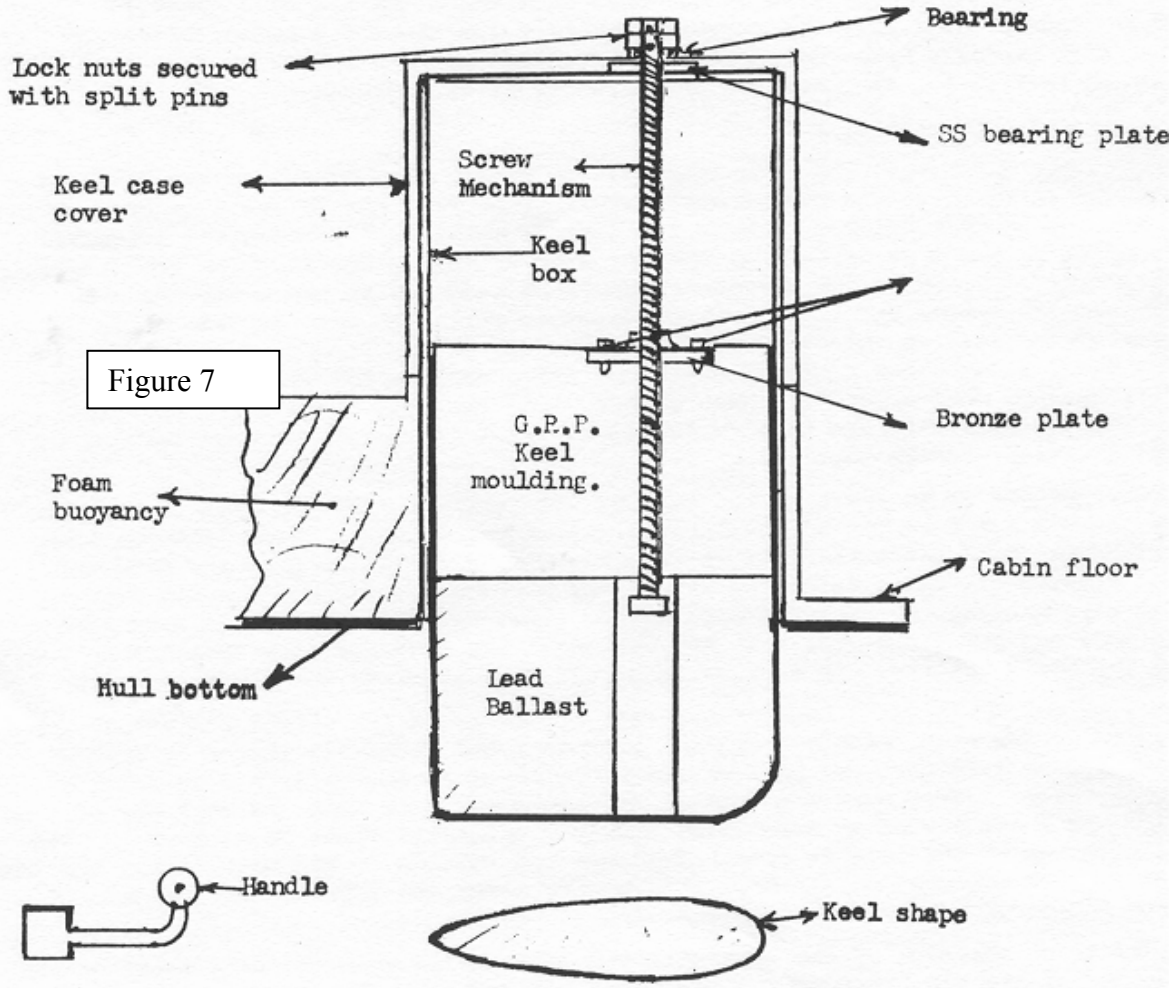

Figure 7

In light weather you should experience very little trouble with full mainsail and genoa in handling all points of sailing with your SANDPIPER 565. If you have been used to a lighter boat you will find the SANDPIPER 565 will take just that much longer to tack, gybe or bear off, so do not at first get too close to moored, or other craft while underway.

In moderate to heavy weather the answer is to reduce sail by reefing and to use a small jib. The method of reefing the mainsail has already been explained. To change jibs when afloat is rather difficult as it means going on the foredeck to reach the stemhead fitting and the hanks on the forestay. It is, therefore, much better to start reefed if in doubt when setting out for a sail, than to set off with full sails and have to reef later. Practice reducing sail in calm weather until the drill becomes easy and you will have no fears when it does become a necessity.

The SANDPIPER 565 handles well in strong winds with reduced sail area, but you should try to judge the moment to tack so as not to have a large wave prevent you coming round, but choose a flat spot, and this comes easily with practice.

Running directly downwind can be a little frightening, but have the boomvang really tight. If rolling conunences pull the mainsheet in, and come up slightly towards the wind so as to regain control.

Gybing in strong winds does need practice, but if you have plenty of room and it gives you more confidence, then you can always tack by coming up on the wind slowly, choose a calm (relative) patch and tack. If you are going to gybe in a strong wind it may be necessary because of a small change in course or wind direction, or else it may involve a much larger change in course such as rounding a buoy.

In the former case sail well by the lee, pull in about a foot of mainsheet, choose a moment when the boat is not slowing or accelerating as the wind pressure on the sails will then be less, shout 'gybe-oh' when the crew will pull over; the boom, the boat is kept on a straight course, and as the boom crosses over allow the mainsheet to go out without a check, helmsman and crew move to the centre of the boat ready to counter any rolling, re-trim on course.

When rounding a buoy pull the tiller up and execute the gybe in one movement, and as the boom comes across, the helmsman and the crew must move to windward to counteract the roll to leeward due to the centrifugal forces in mast and sails. Helmsman must check the tendency for the boat to come up into the wind, re-trim sails.

Sailing under Genoa only Do not attempt to sail too close to the wind, gather way, bring her as close to the wind as she will lie. To tack, throw off the sheets and put the helm down, do not put the helm down until the sheets are thrown free then make use of the boats way to put her about. If for some reason (lack of practice) you cannot tack her, then gybe round, and once round bring her slowly into the wind again.

Sailing under Mainsail only. Generally speaking in the lighter winds it is far easier to sail under main only than genoa only. Make sure you have plenty of way on before tacking. Gybing is done in the same manner as when the genoa is set as well as the main.

Sailing without a Rudder. If this has to be done on occasion, e.g. rudder broken, an 8-ft. oar is loosely lashed to the top of the mainsheet track, the mainsheet is centered. Balance the boat carefully by sail trimming and weight distribution and it will be found that the boat can be sailed, tacked and qvbed with accuracy.

In very strong winds it may be necessary to reef down to the spreaders in order to balance the sails.

Sailing Single-handed. When sailing single-handed give yourself more time to make maneuvers. When tacking or gybing throw off headsail sheets in good time and sheet home at your leisure. In order to facilitate handling of foresheets tie them together and use a piece of tape to prevent the knot loosening.

Point to note. When tacking up very narrow waterways in strong winds you will find that you make faster progress without a headsail than with one.

GENERAL MAINENANCE - SANDPIPER

SAILS

Sails should always be folded and bagged and stored in a clean dry place for maximum sail life. Never store sails wet and this applies especially to storing your spinnaker (or coloured sails) as either dyed Nylon or Dacron sail fabrics tend to bleed if stored wet and transfer colour to white, or even to a darker shade from a lighter shade. The wetter or more compressed the fabric the greater the bleeding, such as stuffed in a sailbag.

WOODWORK

At least twice a season woodwork should be allowed to dry and then thoroughly coated with boiled linseed oil, or teak oil and rubbed off with a clean soft cloth. If grain appears to be rough sand lightly with 400 grit sandpaper before oiling. Woodwork should be oiled before winter storage.

HULL

At the end of the season wash the boat off with warm soapy water, finishing with a protective coat of boat wax.

MINOR GELCOAT REPAIRS

Sandpaper the area to be repaired with *100 grit sandpaper. Large cracks can be grooved along the crack, with a pin or knifepoint, to enlarge. Add catalyst to gelcoat - approximately 5-8 drops per half eggcup. Small Dixie cups are ideal for this purpose.

Apply catalysed gelcoat to area with small brush or knife. When cured and hard, sand using wet and dry paper in successively finer grades from #240 to #600. Polish with rubbing compound, and wax to restore shine. Acetone can be used to clean tools, brushes and fingers. Catalyse only sufficient gelcoat for immediate use.
Store remainder in a cool place (life 3-4 months approx.)

RETRACTABLE KEEL

If it is found necessary to lubricate the keel screw mechanism, it is best accomplished in the following manner. With the boat on a trailer or cradle, remove the TEN screws - five per side - holding the keel casing/table.

Block up the keel under the boat firmly. Remove keel casing/table. Drill out fo\lr rivets holding the stainless steel plate to the keel housing. Wind the keel handle anti-clockwise. The screw will rise up in the cabin allowing application of grease or oil.
Re-rivet the stainless steel plate to the housing and re-install casing/table.